XL2602060169	REV	DESCRIPTION	CHECK	DATE	ECR NO.
	C	修改P1连接器		2026/02/27	

Quantity: 10 PCS

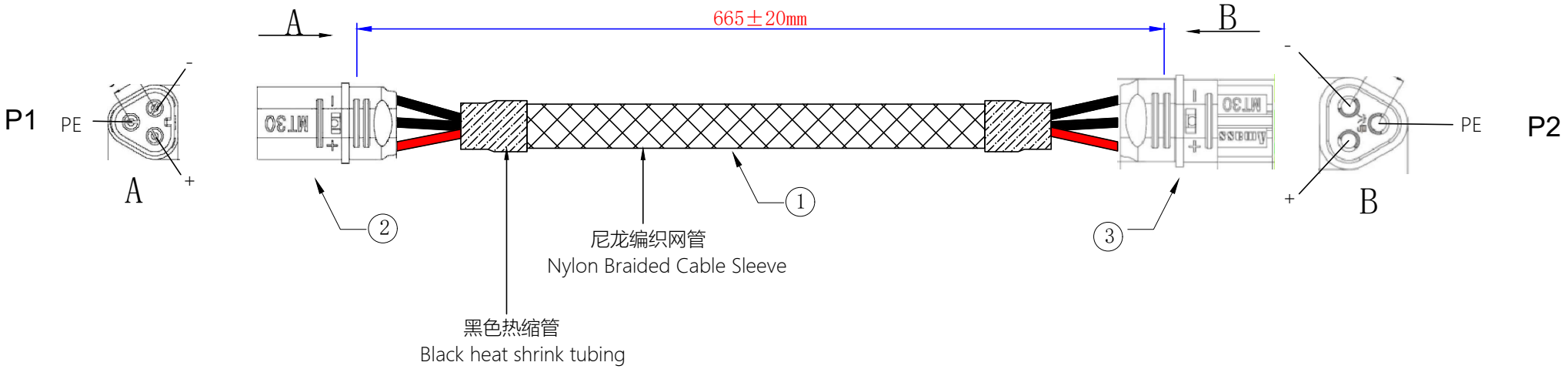

接线表
(WIRING TABLE)

P1		P2
–	黑色(BLACK)	–
+	红色(RED)	+
PE	黑色(BLACK)	PE

测试条件:
1.100%导通OK，不能有断路、短路、开路、错位;
2.DC300V导通阻抗≤3Ω；绝缘阻抗≥10Ω;
3.将线材与治具线对接：正确读数为
1）接点为：　6个
2）显示电线条数为：　3条

外观检验:
1.电线圆实平滑，颜色均匀，护套表面无破损、划伤、脏污、变形等缺陷;
2.插头表面光滑平整、无刺、无明显机械压伤、损伤、毛缺损、变形、脏污、金属无锈迹、无端子高低现象.

序号	名称	用量	规格描述	LCSC编码
1	WIRE	3PCS	UL1007 16AWG（黑/红）；L=670mm	
2	CONNECTOR	1PCS	电源连接器/AMASS:MT30-M	C99903
3	CONNECTOR	1PCS	电源连接器/AMASS:MT30-F	C99902
4				
5				
6				
7				
8				

X.±1.0	X°±1.0°
.X±0.2	.X°±0.5°
.XX±0.05	.XX°±0.01°
DRAWED BY	ZHU
CHECKED BY	
APPROVED BY	

THESE DRAWING AND SPECIFICATIONS ARE THE PROPERTY OF LCSC CO. ,LTD. AND SHALL NOT BE REPRODUCED COPIED OR USED IN ANY MANNER WITHOUT THE PRIOR WRITTEN CONSENT OF LCSC CO. ,LTD

LCSC ELECTRONICS
More Asian Brands, Lower Prices

ITEM		
WD P/N	XL2602060169	
CUST P/N		
WD DWG.NO	1 OF 1	
UNIT : mm	DATE : 2026/02/25	REV : C